CUPOWER

IC ECSCB 100-277 DRY 4IN CS

Art. 166770

Product features

- Integrated wireless module for wireless ecosystem
- 4 way button interface for controlling wireless-capable devices within wireless networks
- Wide voltage 100...277 Vac input
- Suitable for installation in a flush-mounted box
- 5 year warranty

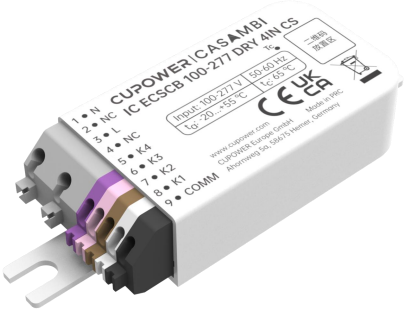

Electrical specifications

Mains voltage supply	
Rated input voltage range	100...277 Vac
Max. input current	0.05 A @ 100 Vac
RF transmit power	+ 8 dBm
Wireless frequency	2.4 GHz
Wireless range (open air)	50 m

Environmental specifications

Operating temperature	-20...+55°C
Storage temperature	-25...+85°C
Working humidity	0%...80%
Store humidity	0%...95%
Lifetime	at Tc 65°C: 50,000 hrs @ 100 Vac
Maximum Tc temperature	65°C
Lifetime Rating	50,000 hrs
Moisture and Dust Rating	IP20

Hunan Xiezhen Electronics Co., Ltd.
Block A&B, Building 11, Innovation Park Linyi Road,
BailLutang Town Suxian District, Chenzhou, Hunan - China

CUPOWER Europe GmbH
Ahornweg 5a
58675 Hemer – Germany

version: 20260603

www.cupower.com

Errors excepted. We reserve the right to make alterations in the interest of improving our products.

Dimensions

Housing dimensions	
Length (L)	80.7 mm
Width (W)	30.0 mm
Height (H)	15.0 mm
For all dimensions: values in mm; tolerances: ± 0.2 mm	

Packaging details	
Packing Units	72 pcs.
Carton Size	193 × 172 × 111 mm
Carton weight	1.9 kg
Product weight	0.022 kg

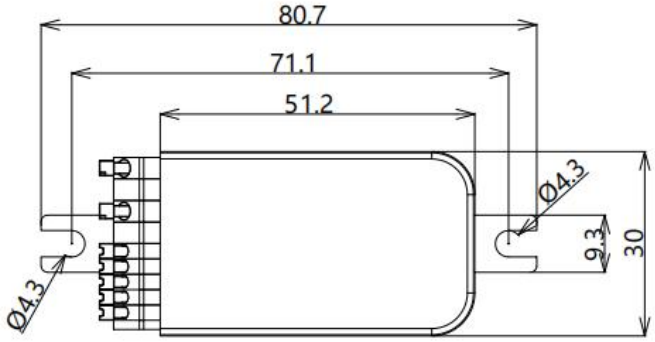

Ratio 1,000

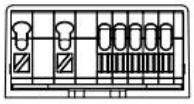

unit: mm
tol: ±0.2 mm

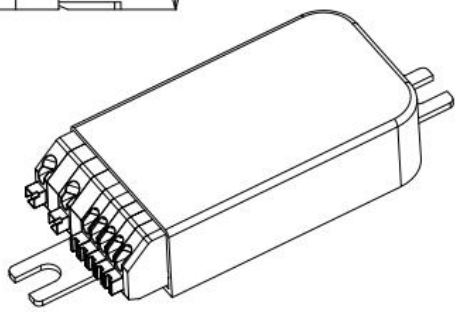

Applicable wiring diagram

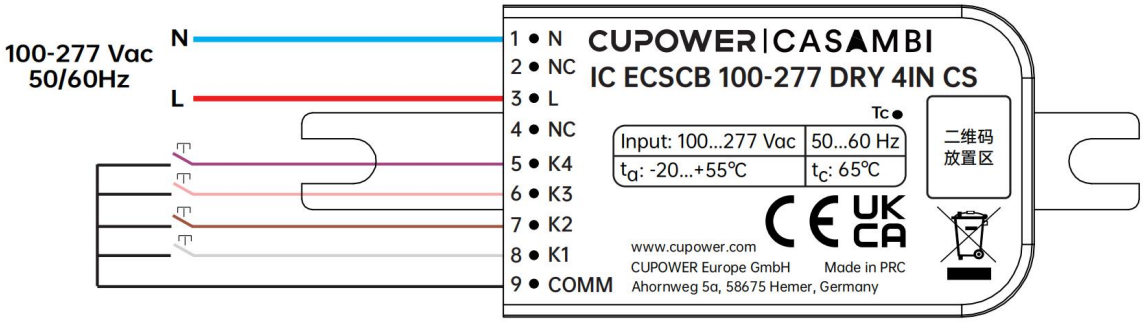

Hunan Xiezhen Electronics Co., Ltd.
Block A&B, Building 11, Innovation Park Linyi Road,
BailLutang Town Suxian District, Chenzhou, Hunan - China

CUPOWER Europe GmbH
Ahornweg 5a
58675 Hemer – Germany

version: 20260603

www.cupower.com

Errors excepted. We reserve the right to make alterations in the interest of improving our products.