CUPOWER

IC EC BLE MM B

Art.168873

This product is designed for use with LED driver of the CUPOWER SKY series , enabling them to be controlled via Bluetooth.

Product features

- Antenna for Bluetooth Low Energy (BLE) wireless modules
- Wireless transmission range up to 100 meters in open-air environments
- Optimized antenna design ensures strong and stable signal quality
- Designed for easy single-hole mounting in luminaires
- IP67 protection achievable when used in combination with the designated accessory
- 5 years warranty

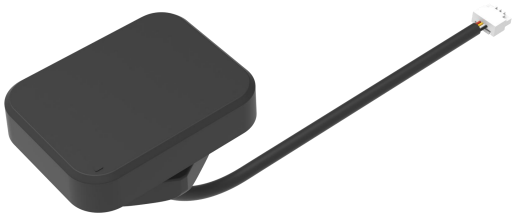

Electrical specifications

Electrical Parameter	
Operating Voltage	3.3V
Wireless Range (Open Air)	up to 100 m
Wireless Frequency	2.4 GHz
RF transmit power	+8 dBm @ LR

Environmental specifications

Operating temperature	-20…+55°C
Storage temperature	-25…+85°C
Working humidity	10%…90%
Store humidity	5%…95%

Compatible models of SKY LED drivers

Art.	Model numbers
166626	ID ELNCB 36/230/050-400 SKY NFC
166619	ID ELNCB 75/230/050-400 SKY NFC
166602	ID ELNCB 100/230/200-700 SKY NFC
110427	ID ECSCB 28/230/150-700 SKY NFC
110441	ID ECSCB 42/230/300-1050 SKY NFC
110502	ID ELSCB 40/230/150-1050 SKY NFC
110755	ID ELSCB 100/230/500-2200 SKY NFC
110779	ID ELSCB 75/230/500-2000 SKY NFC
166787	ID ELNCB 36/230/050-400 SKY NFC TW
166794	ID ELNCB 75/230/050-700 SKY NFC TW
166800	ID ELNCB 110/230/100-900 SKY NFC TW
110311	ID ECSCB 42/230/300-1050 SKY NFC TW

Hunan Xiezhen Electronics Co., Ltd.
Block A&B, Building 11, Innovation Park Linyi Road,
Bailutang Town Suxian District, Chenzhou, Hunan - China

CUPOWER Europe GmbH
Ahornweg 5a
58675 Hemer – Germany

version: 20260601

www.cupower.com

Errors excepted. We reserve the right to make alterations in the interest of improving our products.

110496	ID ELSCB 40/230/150-1050 SKY NFC TW
110762	ID ELSCB 75/230/500-2000 SKY NFC TW

IP 67 accessories (optional)

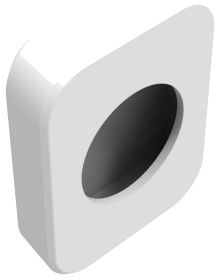

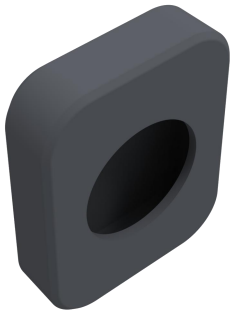

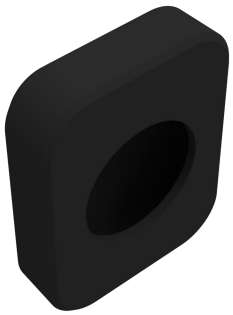

XZ-SKY IP W		XZ-SKY IP G		XZ-SKY IP B	
White		Grey		Black	
Art.	110267	Art.	110281	Art.	110274

Dimensions (L × W × H)	Heat-resistant	Hardness
43.1 × 34.1 × 11.05	≥ 200°C	30 HA

Note： Without the IP67 protection accessory, the antenna meets IP20 requirements. By using the designated accessory and ensuring proper installation in the luminaire, an IP67 waterproof rating is achieved.

Hunan Xiezhen Electronics Co., Ltd.
Block A&B, Building 11, Innovation Park Linyi Road,
Bailutang Town Suxian District, Chenzhou, Hunan - China

CUPOWER Europe GmbH
Ahornweg 5a
58675 Hemer – Germany

version: 20260601

www.cupower.com

Errors excepted. We reserve the right to make alterations in the interest of improving our products.

Dimensions

Housing dimensions	
Length (L)	40.0 mm
Width (W)	30.9 mm
Height (H)	18.1 mm

For all dimensions: values in mm; tolerances: ± 0.2 mm

Packaging details	
Packing units	20 pcs
Carton size	127 x 116 x 88 mm
Carton weight	0.65 kg
Product weight	0.022 kg

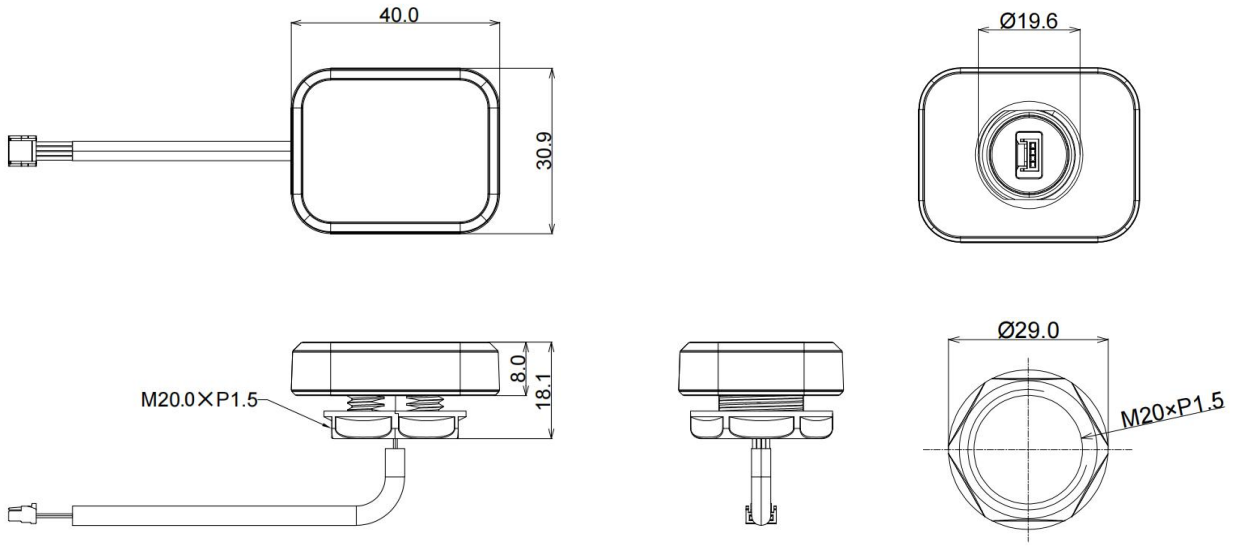

Installation notes

1. Installation hole diameter : Ø 20 +0.2 / 0 mm.

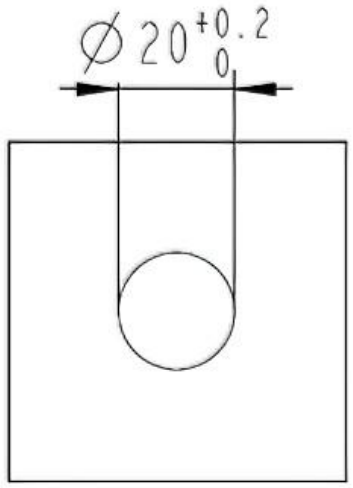

Hunan Xiezhen Electronics Co., Ltd.
Block A&B, Building 11, Innovation Park Linyi Road,
Bailutang Town Suxian District, Chenzhou, Hunan - China

CUPOWER Europe GmbH
Ahornweg 5a
58675 Hemer – Germany

version: 20260601

www.cupower.com

Errors excepted. We reserve the right to make alterations in the interest of improving our products.

2. The surface on the nut side shall be flat and provide a mounting area with a minimum diameter of Ø 30 mm.4.Specified tightening torque for the mounting nut: 1.5 Nm ± 0.1 Nm.

3. The luminaire housing material and thickness shall meet the following recommendations:

(1) steel housings: approx.. 1 mm thickness

(2) aluminium housings: approx.. 2 mm thickness

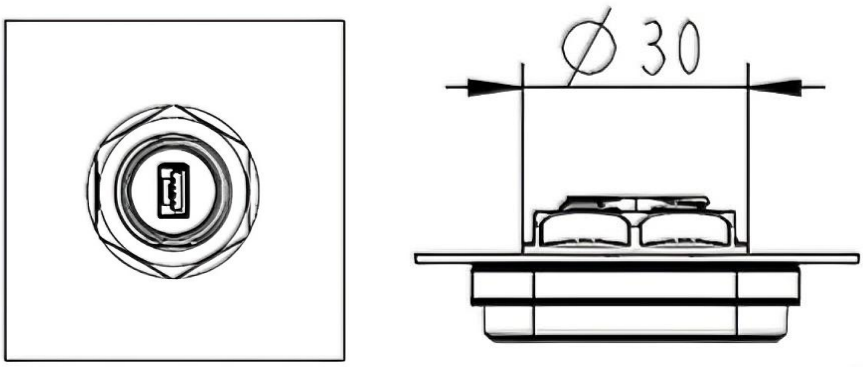

4. The surface for mounting the antenna shall be flat and provide a minimum installation area of 58 mm x 58 mm.

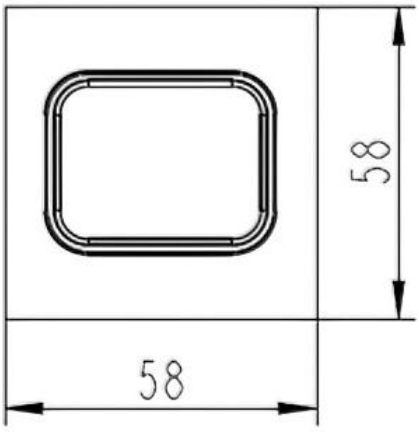

5. Common examples for installation methods

(1) Button installation

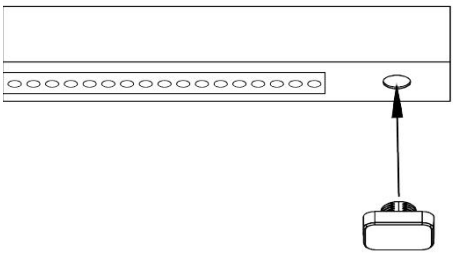

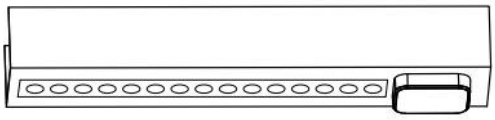

Hunan Xiezhen Electronics Co., Ltd.
Block A&B, Building 11, Innovation Park Linyi Road,
Bailutang Town Suxian District, Chenzhou, Hunan - China

CUPOWER Europe GmbH
Ahornweg 5a
58675 Hemer – Germany

version: 20260601

www.cupower.com Errors excepted. We reserve the right to make alterations in the interest of improving our products.

(2) Side installation

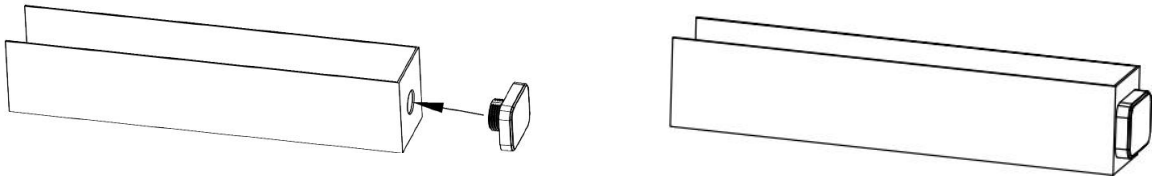

- The antenna shall be installed outside of any metal housing. Metallic components must not obstruct the antenna on the front side direction.
- Note: Actual antenna signal strength may vary depending on the installation conditions and environmental factors.

Wiring diagram

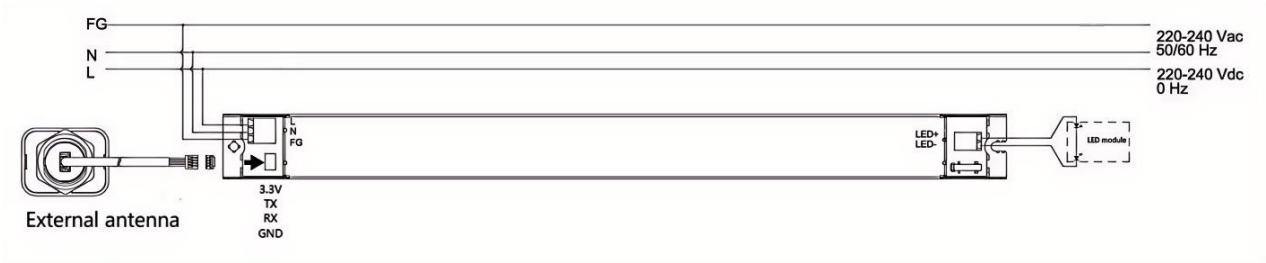

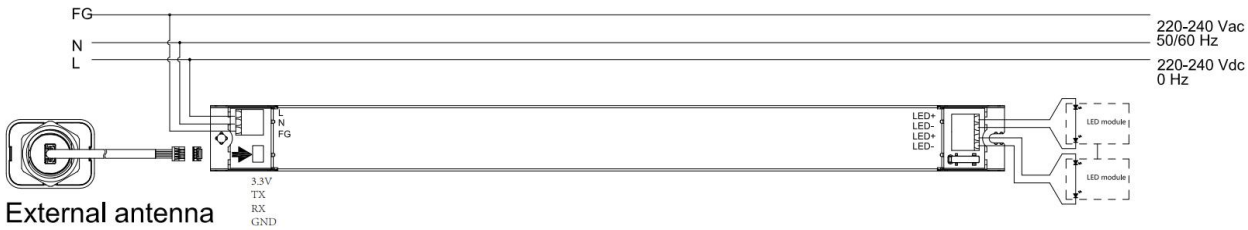

- The antenna is equipped with a standard 300 mm serial port cable. The maximum permissible cable length is 500 mm The antenna is compatible with one driver only.
- When integrating the antenna into a luminaire, appropriate sealing measures may be applied at the interface between the antenna and the luminaire housing to prevent the ingress of dust and moisture.
- Please note:If the antenna is not electrically isolated from the primary power supply circuit (forward circuit with AC input), a minimum clearance of 5 mm must be maintained between the antenna and the power supply circuit.
  If the electrical isolation is provided, clearance requirements do not apply.

Hunan Xiezhen Electronics Co., Ltd.
Block A&B, Building 11, Innovation Park Linyi Road,
Bailutang Town Suxian District, Chenzhou, Hunan - China

CUPOWER Europe GmbH
Ahornweg 5a
58675 Hemer – Germany

version: 20260601

www.cupower.com
Errors excepted. We reserve the right to make alterations in the interest of improving our products.